Presented at *IIAR 2001 Ammonia Refrigeration Convention & Exhibition*
Long Beach, CA March 18-21, 2001

GRAVITY SEPARATOR FUNDAMENTALS AND DESIGN

TODD B. JEKEL, PH.D. DOUGLAS T. REINDL, PH.D., P.E.
UNIVERSITY OF WISCONSIN / INDUSTRIAL REFRIGERATION CONSORTIUM

J. MICHAEL FISHER
VILTER MANUFACTURING CORPORATION

Executive Summary

The objective of this paper is to review the literature on the principles governing gravity-driven separation of liquid-vapor mixtures, review design methods for separators, and develop a model that predicts separator performance given operating requirements (i.e. size or velocity, and design droplet size) subject to design constraints. The model presented can serve as a basis to establish a fundamentals-based new design method for gravity separators. It is not the purpose of this paper to develop or recommend design guidelines; rather it is a literature search and analysis to put the existing design guidelines on the same basis for ammonia.

The paper summarizes landmark literature in the history of gravity separation and reviews the assumptions made in both the literature and the techniques developed in the paper. Equations of motion that define the droplet trajectories in both vertical and horizontal vessels are presented and implemented in a computer model. Results of in-depth analysis aimed at characterizing liquid-vapor separation in both vertical and horizontal vessels are presented.

ASHRAE recommendations for vessel sizing are quantified using the techniques developed in this paper. Other author's recommendations for vertical vessel sizing are also analyzed and compared to the ASHRAE recommendations.

A design example is presented for both vertical and horizontal vessels.

Background

Separators are essential components in industrial refrigeration systems. Separators (also known as suction traps, knock-out drums, low pressure receivers, accumulators, recirculators) are pressure vessels that may serve multiple functions including separation of liquid from a liquid-vapor stream (to protect compressors from liquid carry-over), maintain adequate supply of liquid for mechanical pumps, and to provide a buffer for accumulation of liquid during transient system operation. With the application of refrigerant separators in ammonia refrigeration systems, the catastrophic or accelerated failure of compressors due to liquid-carry over has been greatly reduced.

Virtually all of the liquid-vapor refrigerant separators used in the ammonia refrigeration market today rely on gravity forces to "knock out" or separate liquid from vapor (so called gravity separators). For additional background on vessels, refer to ASHRAE (1998).

Literature Review

Much of the work reviewed for this project has roots originating from Souders and Brown's (1934) work on fractionating columns in the petroleum industry. Fractionating columns are vertical vessels fitted with plates or trays that physically divide the vessel into stages. Each tray is perforated with small holes through which the vapor and entrained liquid droplets pass. The jets of vapor entrain liquid that has fallen by gravity onto the plate surface; the authors describe this as "the throwing of liquid particles by the dynamic action of vapor jets." This situation is quite different from both the vertical and horizontal configuration of accumulators common in ammonia refrigeration today. In fact, Souders and Brown state in their paper:

> "Although this discussion deals exclusively with plate fractionating columns, it is well to indicate that much greater entrainment may be expected in other types of equipment which do not contain plates or other types of entrainment separating devices. The actual entrainment in a flash chamber of a cracking plant (chamber free of any entrainment separating device) is … more than twice the entrainment observed in a fractionating tower. The vapor-liquid mixture in this case entered the large chamber through a single pipe at high velocity, and the large kinetic energy of the stream was an important factor in increasing the entrainment over that of a plate column, although the stream was directed against the lower end of the side of the chamber."

Since the analysis used in Souders and Brown's paper is empirical, its applicability should be strictly limited to the author's original intent. That is, vertical fractionating columns with perforated plate stages. Despite the authors' clear disclaimer, Miller (1971) developed recommendations for ammonia refrigeration accumulators and separators that relied on the methodology in Souders and Brown. In turn, Miller is the foundation for ASHRAE's recommendations in the *Refrigeration Handbook*.

Like Miller, Richards (1985) based his recommendations on Souders and Brown and added that the previously defined methods resulted in preventing "more than 1% of liquid by mass" from carrying over. This statement may have been derived from a reference to Montross (1953) which states that "liquid droplets of 400-500 microns fall in their own vapor" at the separation velocities suggested by application of the Souders and Brown methodology. However, throughout the literature search, we found no reference that quantified the mass distribution of liquid droplet sizes in vapor for separators. Secondly, the separating velocities recommended by Miller (1971) and Richards (1985) do not specify whether they are applicable to vertical or horizontal separators. The upward vapor flow in vertical separators, and its accompanying gravity-counteracting upward drag force, preclude the use of the same requirements. Smaller droplets will potentially settle out in a horizontal separator due to an increased net downward force on the droplet. Separation criteria for horizontal and vertical vessels are clearly not identical.

Wu (1984) developed fundamental methods of separator design that used a simple force balance and correlations for drag force on a spherical droplet. Wu recommends that the design vapor velocity for a vertical separating vessel should be 75% to 90% of the terminal velocity; however, a specific design droplet size never recommended. Wu's horizontal vessel analysis focuses on the use of nozzle angle and its effect on vessel design.

Gerunda (1981) refers to the fundamental methodology, but then applies the methodology of Souders and Brown (1934) to determine the terminal velocity with a K' (equivalent to Souders and Brown's C, the use of this factor is defined in Equation (11)) factor of 0.227 ft/s.

Gerunda recommends that the design vapor velocity not exceed 15% of the terminal velocity calculated.

Svrcek and Monnery (1993) provide a fundamental approach similar to Wu (1984), but bridged the gap by calculating K' as a function of the desired droplet size, if applicable, or as a function of vapor pressure. The variation with pressure is independent of substance. Svrcek and Monnery recommend a design vapor velocity of 75% of the calculated terminal velocity; however, the droplet size necessary to calculate the terminal velocity is not recommended.

Equations of Motion

Gravity separation is conceptually simple. The droplets of any liquid in a vapor flow are acted on by three forces: gravity, buoyancy, and drag. The resultant of these forces causes motion in the direction of the net force. A primary design goal is to size the separator such that the drag and buoyancy forces succumb to the gravity force causing the droplet to disengage, i.e. separate, from the vapor flow. The force balance on a typical liquid droplet can be established by application of Newton's Law:

$$\sum_{i=1}^{n} \vec{F}_i(t) = m_d \vec{a}(t) \tag{1}$$

where the forces, F_i, and acceleration, a, are functions of time, t, and m_d is the mass of the droplet. The magnitudes of the gravity, buoyancy and drag forces, respectively, are defined as follows:

$$F_G = \rho_L V_d g \tag{2}$$

$$F_B = -\rho_v V_d g \tag{3}$$

$$F_D = -\rho_v U^2 C_D A_d / 2 \tag{4}$$

The gravity force is always directed downward, the buoyancy force is opposite the gravity force, and the drag force is opposite the direction of droplet velocity.

The droplet Reynolds number is defined as the ratio of inertia and viscous forces and the characteristic length is the droplet diameter. The droplet Reynolds number is defined as follows:

$$\mathrm{Re}_d = \frac{\rho_v U D_d}{\mu_v} \tag{5}$$

where ρ_v and μ_v are the vapor density and absolute viscosity, respectively, and U is the velocity of the vapor past the droplet relative to the droplet's velocity. The drag coefficient, C_D, for a smooth sphere can be numerically estimated using the following (Bird, 1960):

$$C_D = \frac{24}{\mathrm{Re}_d} \qquad \mathrm{Re}_d < 1 \tag{6}$$

$$C_D = \frac{18.5}{\mathrm{Re}_d^{3/5}} \qquad 1 < \mathrm{Re}_d < 500 \tag{7}$$

$$C_D \approx 0.44 \qquad 500 < \mathrm{Re}_d < 2\times10^5 \tag{8}$$

Or (Gerhart, 1985):

$$C_D = \frac{24}{\mathrm{Re}_d} + \frac{6}{1+\sqrt{\mathrm{Re}_d}} + 0.4 \qquad \mathrm{Re}_d < 2\times10^5 \tag{9}$$

While both of the estimates are equally valid, Equation (9) will be used for the present model development because it is defined over the entire Reynolds number range of interest.

Terminal Velocity

An important concept in gravity separation is the concept of terminal velocity. Terminal velocity is defined as the velocity at which the vertical component of the drag force exactly counteracts the net gravity force (i.e. gravity force minus buoyancy force). Since the forces balance, the acceleration on the body is zero and it falls at a constant velocity.

Wu (1984) and Svrcek and Monnery (1993) both define the droplet velocity, relative to the vapor flow in the vertical direction (y) or:

$$U = U_{v,y} - v_{d,y} \tag{10}$$

This frame of reference necessitates that the vapor velocity, $U_{v,y}$, must be less than the droplet velocity, U, in order for the droplet to settle out. In other words, in a vertical separator a droplet with a terminal velocity equal to the vapor velocity would theoretically be a standing droplet. The terminal velocities for liquid-vapor refrigerant droplets for a range of temperatures are shown in Figure 1.

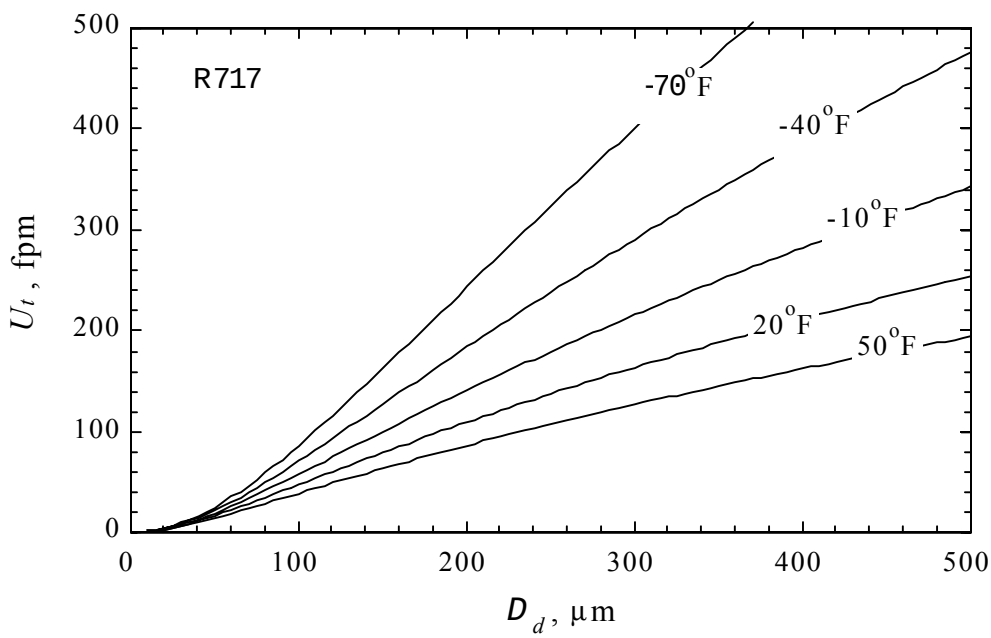

Figure 1 Terminal velocity as a function of droplet size and temperature for liquid-vapor separation.

K' determination

In order to simplify the calculations, Souders and Brown (1934), Gerunda (1981), and Svrcek and Monnery (1993) rearranged the force balance and obtained the following form:

$$U_t = K' \sqrt{\frac{(\rho_L - \rho_v)}{\rho_v}} \tag{11}$$

where K' is a function of droplet size and drag coefficient (which is a function of vessel size, vapor properties, vapor flow rate, and droplet size). The theoretical K' is as follows:

$$K' = \sqrt{\frac{4gD_d}{3C_D}} \tag{12}$$

where C_D is determined from Equations (6)-(8) or (9). Therefore, with the equations from the previous section, the K' can be determined for a range of vapor conditions, liquid densities and droplet sizes. Figure 2 shows the theoretical K' for liquid-vapor ammonia. According to Gerunda (1981), K' is in the range of 0.1 – 0.35 for typical systems. Gerunda recommends a K' of 0.227 and the use of 15% of the calculated terminal velocity for vertical vessel design. This results in an effective K' of 0.034 and corresponds to a droplet size in the range of 50-100 μm for ammonia (see Figure 1).

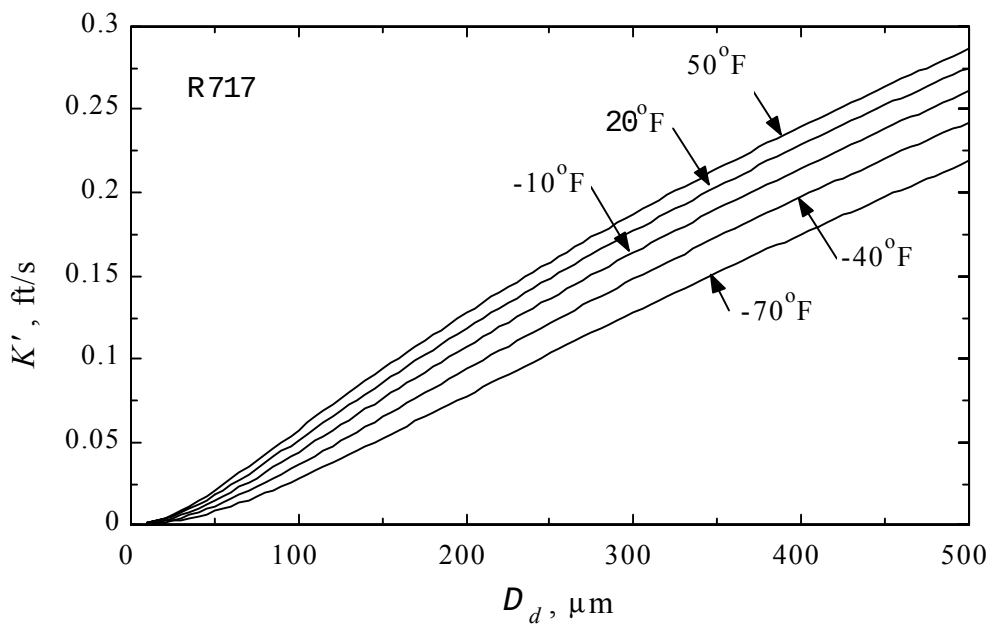

Figure 2 Theoretical K' for liquid-vapor ammonia as a function of droplet diameter and temperature.

Equations to Determine Droplet Trajectories

Substituting the forces into the force balance (Equation (1)) and integrating twice allows for the plotting of the droplet trajectories.

$$v_{d,x}(t) = v_{d,x}^0 + \frac{\int_0^t F_{D,x} dt}{m_d} \tag{13}$$

$$x(t) = x^0 + \int_0^t v_{d,x} dt \tag{14}$$

$$v_{d,y}(t) = v_{d,y}^0 + \frac{\int_0^t F_G + F_B + F_{D,y} dt}{m_d} \tag{15}$$

$$y(t) = y^0 + \int_0^t v_{d,y} dt \tag{16}$$

where $F_{D,x}$ and $F_{D,y}$ are the components of the drag force in the horizontal and vertical direction respectively. The equations apply to both vertical and horizontal vapor flow; however, the x-direction equations simplify to zero for vertical vessels.

The boundary conditions for a solution of droplet trajectories in both vertical and horizontal vessels are as follows:

Variable	Vertical Vessel	Horizontal Vessel
$v_{d,y}^0 =$	$U_{v,y}$	0
$v_{d,x}^0 =$	0	$U_{v,x}$
	$y^0 = Centerline\ of\ inlet$	$x^0 = Centerline\ of\ inlet$

The y^0 for horizontal vessels is less important than the Δy during the residence time in the vessel. More detailed discussion of vertical and horizontal trajectories will be presented later in the paper.

Vertical gravity separation

Vertical separation is the simplest case of gravity separation because all the motion occurs in a single plane, vertical. In addition, the vapor flow area and corresponding vapor velocity in a vertical vessel is unaffected by liquid level. Figure 3 shows a schematic of a vertical liquid-refrigerant separator.

In order for separation to occur, the vapor velocity (Equation (10)) must be less than the droplet terminal velocity (Figure 1). Therefore, the vessel diameter required for separation of a given droplet size with terminal velocity, U_t, is determined as follows:

$$D \geq \sqrt{\frac{4\dot{V}}{\pi S U_t}} \tag{17}$$

where D is the vessel diameter, S is the safety factor to ensure separation of the desired droplet size, and $\dot{V}$ is the vapor volume flow rate.

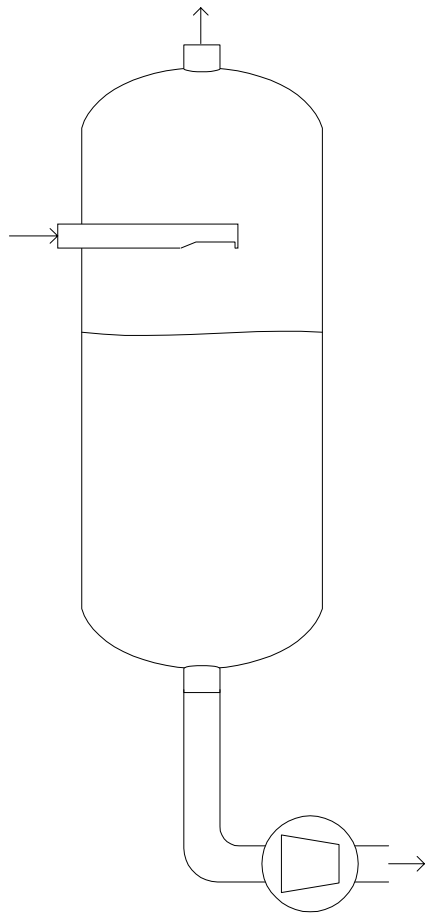

Figure 3 Schematic of a vertical liquid-vapor separator.

Table 2 of Chapter 1 of ASHRAE's *Refrigeration Handbook* (1998) contains recommendations for the sizing of low-pressure vertical separators. For a given refrigerant type, temperature and vertical separation distance, the maximum allowable steady flow vapor velocity is given. However, the details of the analysis or experimental method are not presented, for example the following are not clearly specified:

- carryover limit that leads to the velocity requirement
- droplet size on which the separation distance is based

According to Richards (1985), the requirement from Souders and Brown (1934) (the basis of Miller's (1971) work, and subsequently the basis of ASHRAE *Refrigeration Handbook* recommendations) is that less than 1% carryover of liquid by mass; however, neither Souders and Brown or Miller refer to the amount of carryover other than calling it "not significant." Carryover depends not only on the smallest separated droplet size, but also number of droplets that size and smaller (i.e. a droplet mass distribution). For example, Figure 4 graphically depicts carryover for a hypothetical liquid mass distribution as a function of

droplet size. We were not able to find data characterizing the distribution of liquid mass as a function of droplet size in liquid-vapor ammonia.

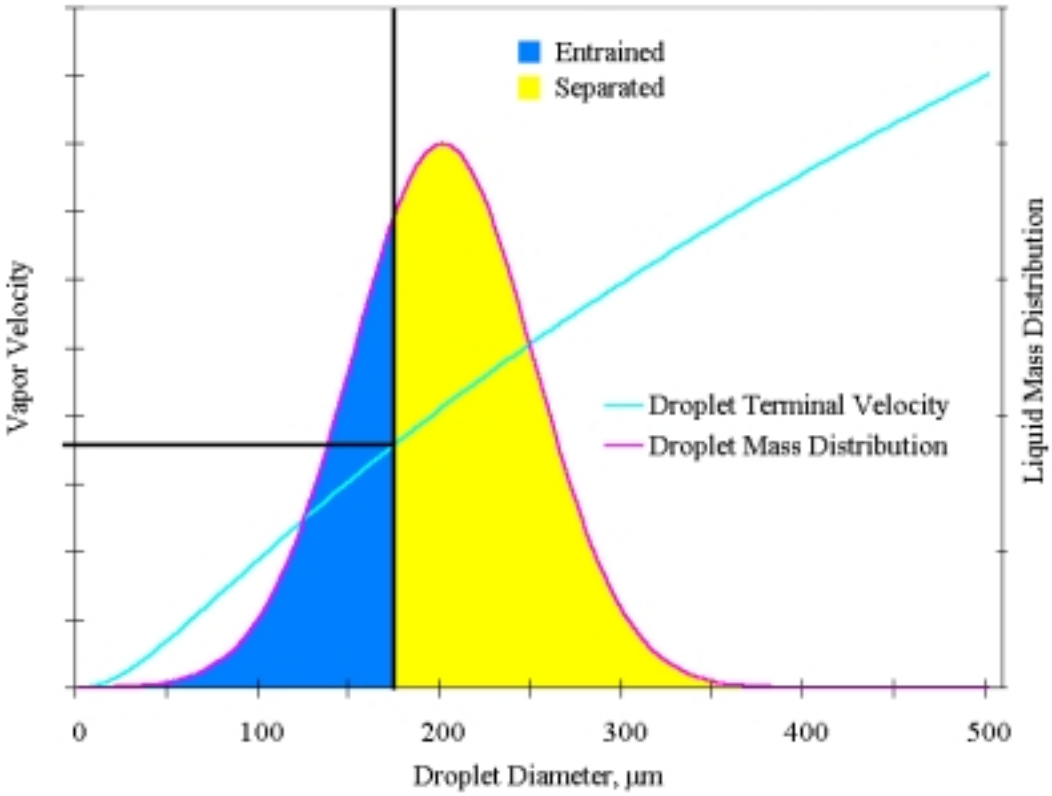

Figure 4 Graphical depiction of carryover with a hypothetical droplet mass distribution.

Stoecker (1998) calculates the droplet size for ammonia that results in the ASHRAE recommendations. Stoecker notes that the droplet size is not consistent (i.e. the recommended vapor velocities do not correspond to a single droplet size or mass). Table 1 shows the largest entrained droplet size (alternatively, the smallest separated droplet size) for the ASHRAE-recommended vapor velocities. Figure 5 shows the same information as Table 1 for the range of vapor velocities recommended by ASHRAE. Note that Table 1 refers to the maximum allowable vapor velocity; ASHRAE recommends the use of a safety factor multiplier of 0.75 for applications that involve "surging loads and pulsating flow."

Note that the critical droplet diameter changes dramatically over the range of conditions covered by the ASHRAE recommendations. Therefore, for the design velocities to result in the same amount of carryover, the liquid mass distribution at a given droplet diameter would have to vary significantly as a function of temperature and vertical separating distance. Some of this difference can be attributed to collisions between droplets in the vertical separating distance of the vessel. However, the mass distribution of droplet sizes will also be a function of the wet return conditions (fraction of liquid/vapor and velocities) to the vessel as well as the presence and design of any entry nozzles. It is outside of the scope of this paper to assess the likelihood of all of the factors resulting in the same amount of carryover.

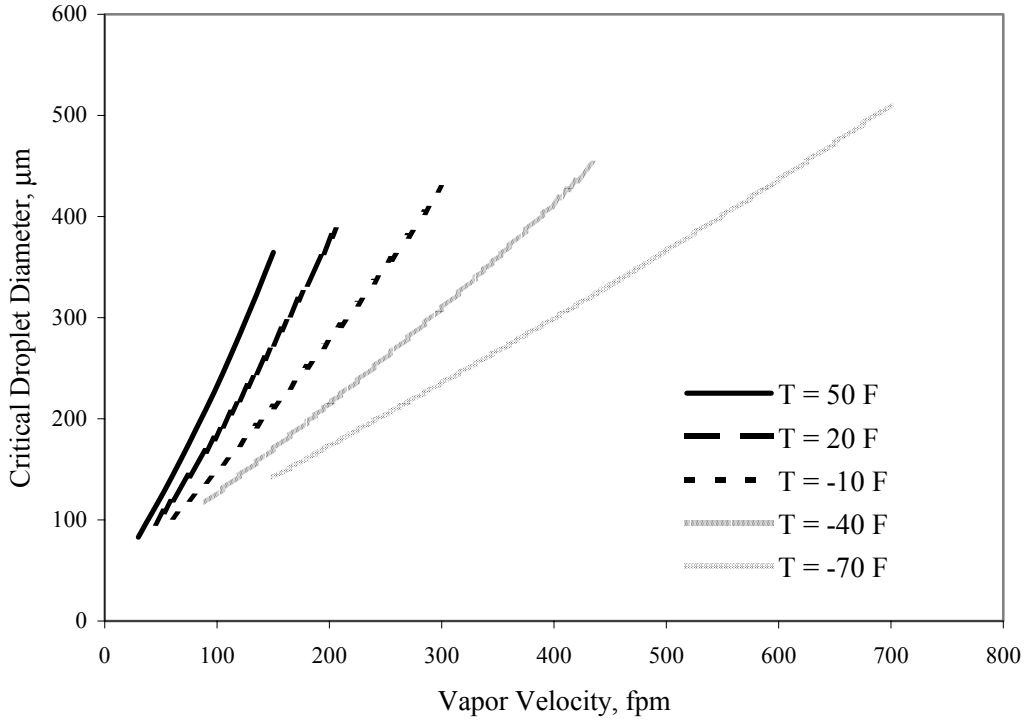

Figure 5 Critical droplet diameter as a function of vapor velocity and temperature.

Table 1 Critical droplet size and maximum vertical travel for ASHRAE-recommended vapor velocities for vertical separators.

		Temperature				
Vertical Separating Distance	Units	50°F (10°C)	20°F (-6.67°C)	-10°F (-23.33°C)	-40°F (-40°C)	-70°F (-56.67°C)
10 in (254 mm)	fpm (m/s) µm in (mm)	29 (0.15) 81 µm 0.08 (2.03)	42 (0.21) 92 µm 0.16 (4.06)	61 (0.31) 104 µm 0.34 (8.64)	95 (0.48) 122 µm 0.84 (21.3)	158 (0.80) 147 µm 2.33 (59.2)
24 in (610 mm)	fpm (m/s) µm in (mm)	125 (0.64) 296 µm 1.27 (32.3)	172 (0.87) 317 µm 2.41 (61.2)	253 (1.3) 355 µm 5.23 (133)	392 (2.0) 405 µm 12.6 (320)	649 (3.3) 472 µm 34.8 (884)
36 in (914 mm)	fpm (m/s) µm in (mm)	139 (0.71) 334 µm 1.56 (39.6)	195 (0.99) 364 µm 3.07 (78.0)	281 (1.4) 398 µm 6.40 (163)	428 (2.2) 444 µm 14.9 (378)	697 (3.5) 508 µm 39.9 (1,010)

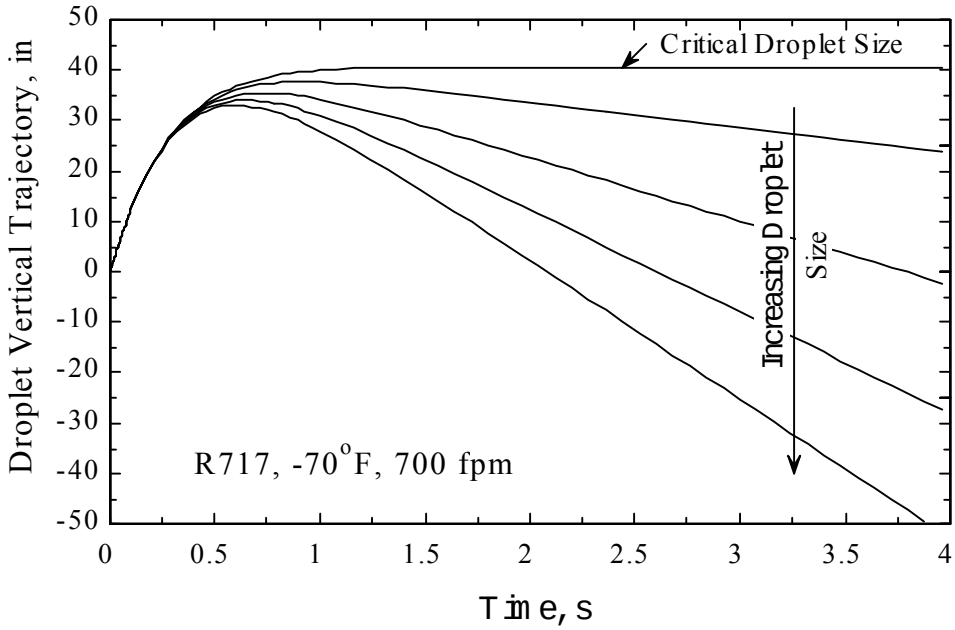

Figure 6 Droplet trajectories as a function of time for a range of droplet size. The critical droplet size is 511 μm for the plotted vapor conditions. Subsequent trajectories are sizes of 530 μm to 620 μm in 30 μm increments.

Solution of the equations of motion outlined previously in this paper form the basis of Table 1 and Figures 5 and 6. Figure 6 shows the droplet trajectories, as a function of time, for the separation of liquid ammonia droplets in ammonia vapor at -70°F (-56.7°C) and 700 ft/min (3.56 m/s) with an initial velocity equal to the vapor velocity.

Figure 7 shows the maximum vertical travel of the "critical-sized" droplet as a function of the temperature and vapor velocity. The specific ASHRAE-recommended vertical travel are shown in Table 1. The results shown in Figures 5 and 6 offer insight into the recommendations in Miller (1971) and ASHRAE (1998).

- At low velocities, the maximum vertical travel (Figure 7) of the critical droplet is small relative to the requirement in ASHRAE (1998). For example, at 50°F (10°C) and 29 ft/min (0.15 m/s) the vertical separation distance requirement is 10-in (254 mm) (ASHRAE, 1998), but the maximum vertical travel (Table 1 or Figure 7) is less than 0.08-in (2.03 mm).
- Conversely, at -70°F (-56.67°C) and 700 ft/min (3.56 m/s) the vertical separation distance requirement is 36-in (914 mm) (ASHRAE, 1998), but the maximum vertical travel (Table 1 or Figure 7) is nearly 40-in (1,016 mm). In the latter case, since the maximum vertical travel is larger than the ASHRAE recommended vertical separation distance, the smallest droplet size that is separated is larger than the critical droplet size. In other words, the smallest separated droplet size is determined by the vertical separation distance and not the terminal velocity of the droplet.

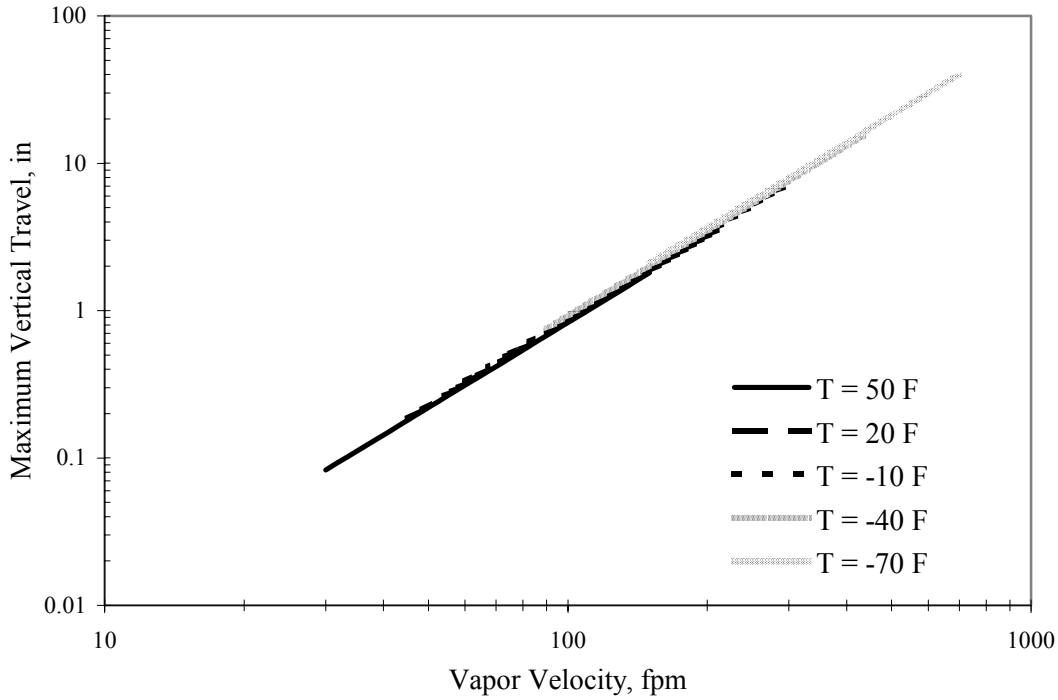

Figure 7 Maximum vertical travel of critical droplet as a function of vapor velocity and temperature.

Wu (1984) takes a more fundamental approach for vessel sizing; first, calculate the terminal velocity of the specified droplet size, then set the vapor velocity to 75%-90% of that value. Using this methodology, Table 2 outlines the vapor velocities for a range of droplet sizes and vapor temperatures for vapor velocity of 82.5% of the droplet terminal velocity. Recall that Gerunda's (1981) recommended K' factor and safety factor resulted in design droplet diameters in the range of 50-100 μm for the range of temperatures for –70 to +50°F (-56.67 to 10°C).

Gerunda (1981) also had recommendations for vertical separating distance, inlet distance above liquid level and inlet configuration. They are as follows:

- The distance between the inlet and the mist eliminator (or outlet) should be equal to the diameter of the vessel, but a minimum of 3' (0.91 m).
- The distance between the inlet and the maximum liquid level should be equal to one-half the vessel diameter, but a minimum of 2' (0.61 m).
- Inlets should direct flow downward.

Table 2 Tabulated Wu (1984) recommendation ($S = U_v/U_t = 0.825$) for vapor velocity for a vertical liquid-vapor ammonia separator for a range of droplet size and vapor temperature. Last table line are recommendations for 24-in vertical separation distance from ASHRAE (1998).

		Vapor Temperature				
Diameter µm	Units	50°F (10°C)	20°F (-6.67°C)	-10°F (-23.33°C)	-40°F (-40°C)	-70°F (-56.67°C)
25	fpm (m/s)	3.35 (0.017)	3.77 (0.019)	4.23 (0.021)	4.73 (0.024)	5.28 (0.027)
50	fpm (m/s)	11.5 (0.058)	13.4 (0.068)	15.5 (0.079)	17.8 (0.091)	20.4 (0.104)
100	fpm (m/s)	31.9 (0.162)	38.9 (0.198)	47.5 (0.242)	58.2 (0.296)	71.0 (0.361)
200	fpm (m/s)	71.0 (0.361)	90.0 (0.457)	116 (0.589)	152 (0.770)	200 (1.02)
300	fpm (m/s)	105 (0.531)	135 (0.685)	178 (0.903)	240 (1.22)	331 (1.68)
500	fpm (m/s)	160 (0.812)	210 (1.07)	283 (1.44)	393 (2.00)	566 (2.87)
ASHRAE 24-in VSD	fpm (m/s)	125 (0.635)	195 (0.991)	253 (1.29)	392 (1.99)	649 (3.30)

Gerunda's recommendations are more conservative than the ASHRAE recommendations (1998). ASHRAE allows vertical separating distances from 10 in (0.254 m) to 36" (0.91 m). The distance between the recommended inlet nozzle and the maximum liquid level is given by the following relation for a 24" (0.61 m) vertical separating distance:

$$H = \sqrt{\frac{7.33\dot{V}}{U_{v,y}}} \tag{18}$$

where H is in inches, the volume flow rate is in cfm and the vapor velocity is in ft/min. If the inlet is simply a down-turned elbow, ASHRAE recommends a distance of one-fifth of the internal vessel diameter.

Richards (1985) states that common rules of thumb for vapor velocity in vertical accumulators are 140 ft/min (0.71 m/s) and 200 ft/min (1.0 m/s) for high- and low-stage accumulators respectively.

Horizontal gravity separation

Figure 8 shows a schematic of a horizontal liquid-refrigerant gravity separator. While the same equations apply to determine droplet trajectories, several key differences exist between horizontal and vertical separation:

- No significant upward vapor velocity to counteract the gravity force results in a larger net force to separate droplets.
- Horizontal separation is complicated by the fact that droplet trajectories that have both horizontal and vertical components of motion.
- Vapor velocity is a function of the liquid level (i.e. liquid and vapor occupy the cross-section of the vessel) for a fixed volume flow of gas through the separator.

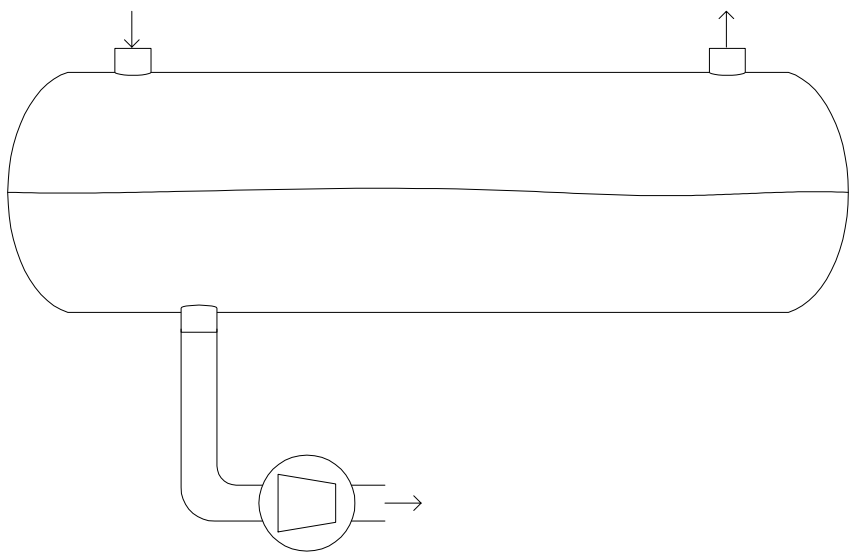

Figure 8 Schematic of horizontal liquid-vapor separator.

Residence time of the droplet is important in horizontal gravity separation. The residence time is determined as follows:

$$\tau_R = \frac{L}{U_{v,x}} \tag{19}$$

where L is the length in the x-direction between in the inlet and outlet of the vessel (see Figure 8) and $U_{v,x}$ is the vapor velocity in the x-direction.

During the residence time, the droplet falls at its terminal velocity. In order for droplet separation to occur, the droplet must fall from its entrained position in the vapor flow to the surface of the liquid or vessel shell (if less than half-full of liquid) within the residence time. Solution of droplet trajectories using Newton's Law (Equation (1)) for: a range of sizes, an initial droplet velocity of zero in the y-direction, and the vapor velocity ($U_{v,x}$) in the x-direction showed that the acceleration of the droplet to its terminal velocity was

1. short compared to the residence time, and

2. had little (<5%) impact on the vertical distance that the droplet traveled.

Therefore, the distance that a droplet falls during the residence time can be simplified to:

$$\Delta y = \tau_R U_t \tag{20}$$

where U_t is determined from the requirement of a zero net force in the y-direction. The geometry of the vessel and the height of the liquid will determine whether the droplet is separated. As the height of the liquid is increased, the vapor flow area decreases as shown in Figure 9, where A_v is the vapor flow area above the liquid and A_{vessel} is the total cross-sectional area of the vessel. The decreased area means that the vapor velocity will increase if the capacity (i.e. volume flow rate) and temperature remain constant. The increased vapor velocity reduces the residence time of the droplet, thus the distance that the droplet will fall during residence decreases.

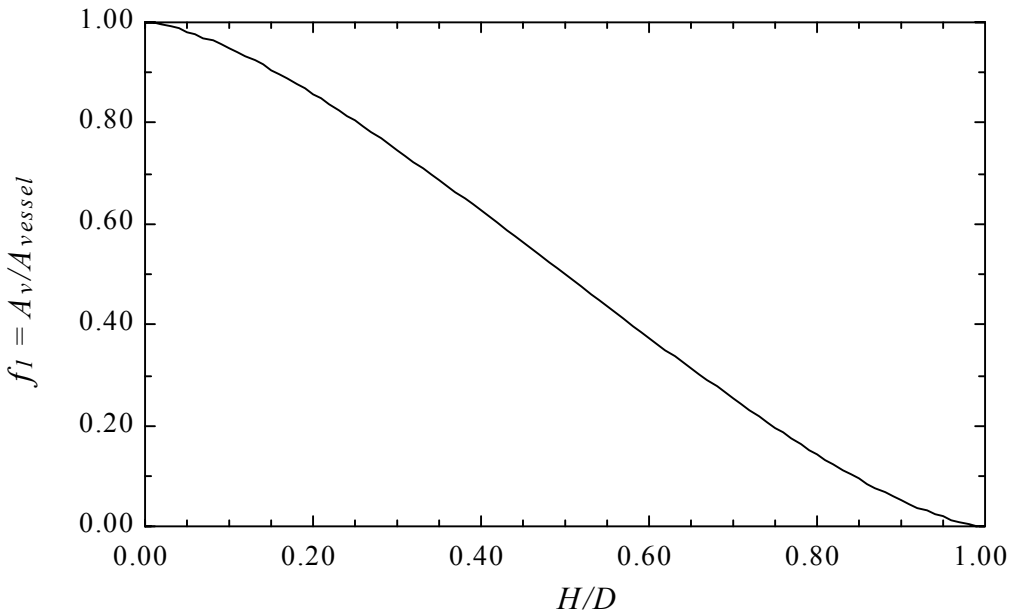

Figure 9 Ratio of vapor flow area to vessel cross-sectional area as a function of ratio of height of liquid to vessel diameter.

However, as the height of liquid increases the required distance for separation of the droplet decreases. Figure 10 shows the maximum and the average maximum $\left(\overline{\Delta y} / D\right)$required distance for separation as a function of the ratio of height of liquid to vessel diameter. The maximum distance is simply the diameter of the vessel minus the height of the liquid. The average maximum distance is defined as the average height of the vessel shell above the liquid level.

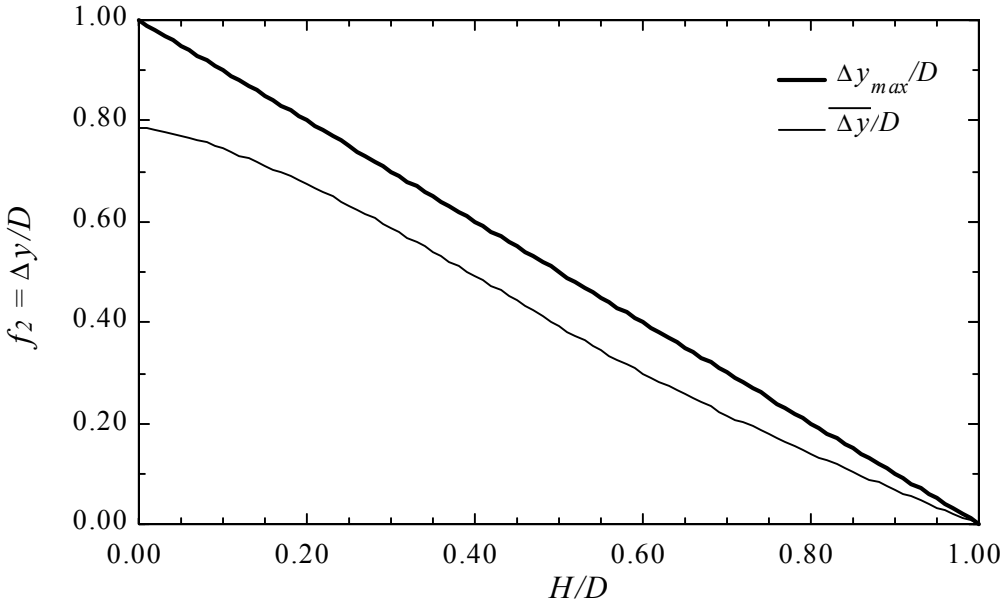

Figure 10 Ratio of maximum and average maximum droplet fall to vessel diameter as a function of the ratio of height of liquid to vessel diameter.

Substitution of Equation (19) and $U_{v,x} = \dot{V}/f_1 A_{vessel}$ into Equation (20) gives

$$\Delta y = \frac{U_t L}{U_{v,x}} = \frac{U_t L f_1 A_{vessel}}{\dot{V}} \tag{21}$$

where f_1 is taken from Figure 9 for a given H/D ratio. Subsequent substitution of $\Delta y = f_2 D$ (Figure 10) into Equation ((21)), and rearranging gives

$$U_t = \frac{\dot{V}}{\left(A_{vessel} \cdot (L/D)\right)} \cdot \left(\frac{f_2}{f_1}\right) \tag{22}$$

For convenience, the ratio of f_2 and f_1 is plotted in Figure 11. Notice that, essentially, the ratio of f_2 and f_1 is constant at values of 0.5 at 1.0 and 0.78 for maximum and average maximum respectively, at values of H/D ratio up to approximately 0.5. This means that the terminal velocity, and therefore the size, of the separated droplet is identical for all liquid levels less than half-full given the same vapor flow rate and vessel dimensions (see Equation (22)). As the liquid level increases above half-full, the droplet terminal velocity for separation increases, thus the separated droplet size increases.

ASHRAE (1998) recommendations for horizontal separators are more difficult to quantify. According to ASHRAE, "horizontal separators should have inlets and outlets separated horizontally by at least the vertical separating distance." In addition, ASHRAE states, "as the horizontal separating distance is increased beyond the vertical separating distance, the residence time of the vapor passing through is increased so that higher velocities than allowed in vertical separators can be tolerated." However, the term "higher" is never quantified in ASHRAE (1998).

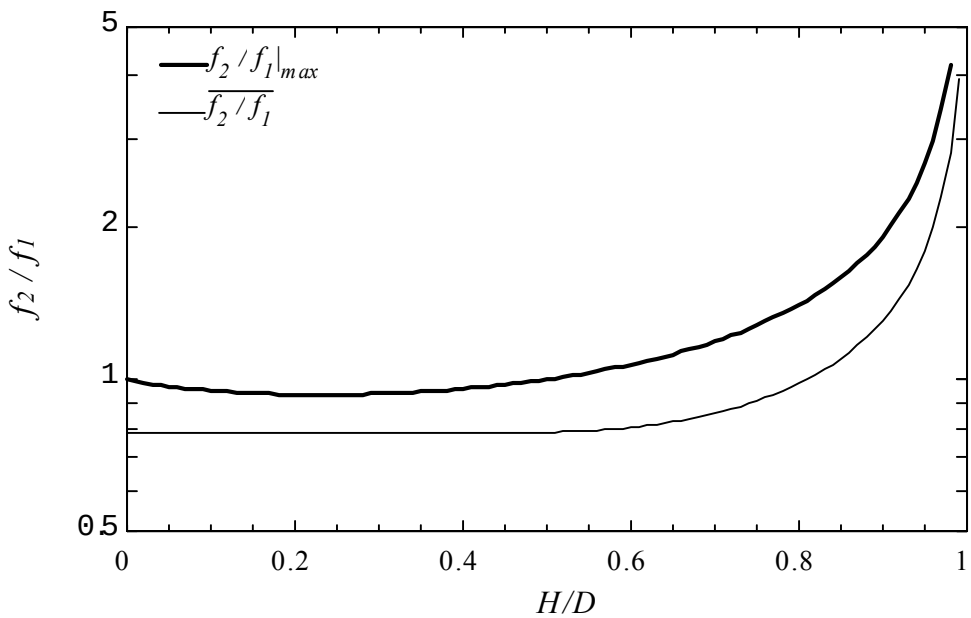

Figure 11 Horizontal separation geometry factor as a function of *H/D*.

Since "many designers try to avoid operation with liquid levels much above the midheight of the [horizontal] vessel" (Stoecker, 1998), it is likely that the vessel volume will be controlled by the surge and ballast volumes that the accumulator must accommodate.

Gerunda (1981) has some recommendations for sizing horizontal vessels.

- A minimum vapor space of 15" (0.38 m) of vapor space.
- Neglect the volume of the dished head space.
- Inlets and outlets should be as close to the ends as practical.

Contrary to Stoecker, Gerunda states that the maximum liquid level should not be below the midheight of the vessel. It is unclear why Gerunda makes this recommendation, but it likely involves the increased distance that the droplets must fall in order to be separated. It appears from Equation (22) and Figure 11 that there is no theoretical penalty for operation with a liquid level below the midheight of the vessel.

Richards (1985) recommends designing for the same vapor residence time as for the rules of thumb for vertical vessels. For example, for a low-stage vessel, the residence time should be equal to the 24" (0.61 m) vertical separating distance divided by 200 ft/min (1 m/s), or 0.6 s.

Vessel Design Analysis

A design problem was chosen that corresponds approximately to a 225 ton (790 kW_t) refrigeration load pumped from a low-pressure vessel with a recirculation rate of 4:1. The vapor volume flow rate is the sum of the evaporated refrigerant from the load and the flash gas from the high-pressure receiver to maintain a constant liquid level in the vessel. These conditions result in the following values necessary for a vessel sizing example:

Input	English	SI
Vapor/liquid temperature	-20°F	-28.9°C
Vapor volume flow rate	1,480 cfm	699 L/s
Liquid volume flow rate	55 gpm	3.5 L/s
Surge volume	11 ft^3	312 L
Liquid reserve volume (5 min)	36.8 ft^3	1,040 L

Vertical vessel

The following vertical vessel design recommendations are considered:

1. ASHRAE (1998) with 24" (0.61 m) 299 ft/min (1.5 m/s)
   a. Determine the vessel diameter:

$$D_{vessel} = \sqrt{\frac{4\dot{V}}{\pi U_{v,y}}} = \sqrt{\frac{4 \cdot 1{,}480}{\pi \cdot 299}} = 2.51' = 30.1'' \;\therefore\; \text{use } 36'' \;(0.91 \text{ m})$$

   Note that the actual vapor velocity is 209 ft/min (1.06 m/s) corresponding to a critical droplet size of 265 μm.

   b. Determine the length of the liquid section corresponding to surge and ballast:

$$L_{liquid} = \frac{V_{surge} + V_{ballast}}{\pi D_{vessel}^2 / 4} = \frac{11 + 36.8}{\pi (3)^2 / 4} = 6.8 \text{ ft } (2.1 \text{ m})$$

   c. Determine the height of nozzle above the maximum liquid level:

$$H = \frac{D_{vessel}}{5} = \frac{36}{5} = 7.2'' = 0.6' \;(0.18 \text{ m})$$

   d. Sum the lengths to determine the total length.

$$L_{vessel} = L_{liquid} + H + VSD = 6.8 + 0.6 + 2 = 9.4' \;(2.87 \text{ m})$$

2. Gerunda (1981) and Wu (1984) ~100 μm droplet size
   a. Determine the vapor velocity. From Table 2 the recommended vapor velocity is approximately 50 ft/min (0.25 m/s).
   b. Determine the vessel diameter:

$$D_{vessel} = \sqrt{\frac{4\dot{V}}{\pi U_{v,y}}} = \sqrt{\frac{4 \cdot 1{,}480}{\pi \cdot 50}} = 6.1' = 73.7'' \;\therefore\; \text{use } 78'' \;(2 \text{ m})$$

   Note that the actual vapor velocity is 45 ft/min (0.23 m/s) corresponding to a critical droplet size of 80 μm (recall the safety factor of 0.825 used in Table 2).

   c. Determine the length of the liquid section corresponding to surge and ballast:

$$L_{liquid} = \frac{V_{surge} + V_{ballast}}{\pi D_{vessel}^2 / 4} = \frac{11 + 36.8}{\pi (6.5)^2 / 4} = 1.4 \text{ ft (0.44 m)}$$

d. The height of nozzle above the maximum liquid level is half the diameter of the vessel, or 3.25' (1 m).

e. The vertical separation distance is equal to the diameter of the vessel, or 6.5' (2 m).

f. Sum the lengths to determine the total length.

$$L_{vessel} = L_{liquid} + H + VSD = 1.4 + 3.25 + 6.5 = 11.15' \text{ (3.4 m)}$$

3. Richards (1985) 200 ft/min (1.0 m/s)

a. Determine the vessel diameter:

$$D_{vessel} = \sqrt{\frac{4\dot{V}}{\pi U_{v,y}}} = \sqrt{\frac{4 \cdot 1{,}480}{\pi \cdot 200}} = 3.07' = 36.8'' \;\therefore \text{ use } 42'' \text{ (1.07 m)}$$

Note that the actual vapor velocity is 154 ft/min (0.78 m/s) corresponding to a critical droplet size of 200 μm.

b. Determine the length of the liquid section corresponding to surge and ballast:

$$L_{liquid} = \frac{V_{surge} + V_{ballast}}{\pi D_{vessel}^2 / 4} = \frac{11 + 36.8}{\pi (3.5)^2 / 4} = 4.97 \text{ ft (1.5 m)}$$

c. Determine the height of nozzle above the maximum liquid level:

$$H = \frac{D_{vessel}}{5} = \frac{42}{5} = 8.4'' = 0.7' \text{ (0.21 m)}$$

d. Sum the lengths to determine the total length.

$$L_{vessel} = L_{liquid} + H + VSD = 5 + 0.7 + 2 = 7.7' \text{ (2.35 m)}$$

Obviously, the three design recommendations result in drastically different vessel designs. The purpose of this exercise is not to validate one method, but rather to compare and contrast the methods on an equal basis. Gerunda's design droplet size (assumed to be 100 μm in the example) may be extremely conservative for ammonia refrigeration. In addition, if such small droplets are necessary to be separated, gravity separation alone may not be feasible.

Horizontal vessel

The design of a horizontal vessel is a more complicated procedure than for a vertical vessel because the both liquid and vapor occupy the cross-section of the vessel; therefore, the separation and accumulation functions of the vessel are dependent on each other. Because of this dependency, there are several designs that can accomplish the same design objectives. For example, a smaller diameter vessel can be used by making the length of the vessel longer.

1. Specify the length of the vessel that best accommodates the space (or specify an *L/D* ratio). For this example, we will choose an *L/D* ratio of 4.

2. Specify the fraction of the vessel that corresponds to the maximum liquid level. We will choose half-full (H/D=0.5, i.e. f_1 = 0.5) for this example.
3. Calculated the diameter of the vessel that will accommodate the surge and ballast liquid volumes.

$$V_{surge} + V_{ballast} = f_1\left(\pi D_{vessel}^2/4\right)L = f_1\left(\pi D_{vessel}^3/4\right)\left(L / D_{vessel}\right)$$

$$D_{vessel} = \sqrt[3]{\frac{4\left(V_{surge} + V_{ballast}\right)}{\pi f_1\left(L / D_{vessel}\right)}} = \sqrt[3]{\frac{4\cdot(11+36.8)}{\pi\cdot 0.5\cdot(4)}} = 3.12' = 37.5''$$

$$\therefore\ D_{vessel} = 36''\ (0.91\text{ m})$$

Since the chosen diameter is smaller than required, we will recalculate the vessel length so that the maximum liquid level is half-full.

$$L = \frac{V_{surge} + V_{ballast}}{f_1\left(\pi D_{vessel}^2/4\right)} = \frac{11+36.8}{0.5\cdot\left(\pi\cdot(3)^2/4\right)} = 13.5'\ \ (4.1\text{ m})$$

This results in an L/D = 4.5. Obviously, we could have sized the diameter at 42" (1.07 m) and used a shorter length if the space could not accommodate the design or the economics of the vessel alternatives were precisely known.

4. Determine the terminal velocity of the critical droplet using Equation (22). Note that the ratio of f_2 and f_1 is 0.78 from Figure 11 for the average separation distance.

$$U_t = \frac{\dot{V}}{\left(A_{vessel}\cdot(L/D)\right)}\cdot\left(\frac{f_2}{f_1}\right) = \frac{1{,}480}{\left(\pi(3)^2/4\right)\cdot 4.5}\cdot 0.78 = 36.3\text{ ft / min (0.18 m / s)}$$

5. Determine the critical droplet size from Figure 1. The critical droplet size is approximately 70 μm.
6. Calculate the residence time as a check with Richards (1985) recommendation. Recall that the residence time for a low-stage accumulator with a 24" (0.61 m) was 0.6 s.

$$U_{v,x} = \frac{\dot{V}}{f_1 A_{vessel}} = \frac{1{,}480}{0.5\cdot\left(\pi(3)^2/4\right)} = 419\text{ ft / min (2.1 m / s)}$$

$$\tau_R = \frac{L}{U_{v,x}} = \frac{13.5}{419} = 0.032\text{ min} = 1.9\text{ s}$$

As mentioned earlier, we could have used a 42" (1.07 m). The resulting length for half-full would be 9.9 ft (3 m) corresponding to an L/D = 2.8. The critical droplet size is approximately 80 μm and the residence time is still 1.9 s.

We also could allow a maximum liquid height higher than midheight of the vessel. If we stayed with an L/D = 4 with the 36" (0.91 m) vessel diameter, the resulting liquid height would be 55% of the vessel diameter. The resulting critical droplet diameter is approximately 80 μm and the residence time is 1.5 s.

Other references cited in this paper recommend calculating the area corresponding to the separation function of the accumulator. However, unless the designer is willing to allow a

maximum liquid height significantly higher than midheight of the vessel, the accumulation function (i.e. surge and ballast liquid volume) of the vessel controls the vessel size. For example, a vessel sized for a residence time of 0.6 s could have a diameter of 36 " (0.91 m), a length of 8.9 ft (2.7 m), the liquid height would be 71% of the vessel diameter, and the critical droplet diameter is 100 μm. Note that 71% full only allows approximately 10.5" (0.27 m) of vapor space above the maximum liquid level.

Conclusions

The paper summarizes landmark literature in the history of gravity separation and defines the assumptions made in the literature. Equations of motion that define the droplet trajectories in both vertical and horizontal vessels are presented and implemented. In depth characterization of both vertical and horizontal vessels are done for liquid-vapor refrigerant separation. Techniques for assessing separation performance (i.e. critical droplet size) are presented for both vertical and horizontal vessel.

The techniques developed are applied to the ASHRAE recommendations for vertical vessel sizing for liquid-vapor refrigerant separation to determine the droplet size that the recommendations separate.

The geometry complications of horizontal vessels are calculated and presented graphically. Combination of the graphical representation of the geometric complexities of a horizontal separator and the terminal velocity as a function of droplet size and refrigerant temperature results in a simple methodology for determination of the smallest separated droplet in a horizontal separator.

Several examples for vertical vessel sizing are considered and the resulting designs are compared. An example of horizontal vessel sizing is presented, and implications of alternative design requirements are investigated.

Despite the years of successful design of separators based on the existing design recommendations, little information is out there in the form of *fundamental* design recommendations for separation in ammonia refrigeration systems. In order to establish fundamental design recommendations, more information about the droplet size ranges, distribution of liquid mass as a function of droplet size, and requirements that minimize compressor wear is needed.

Nomenclature

Roman	[L=Length,M=Mass,T=Time]
a	Acceleration, [L/T^2]
A_d	Cross-sectional area of droplet, [L^2]
A_{vessel}	Cross-sectional area of vessel, [L^2]
C	Parameter defined by Souders and Brown (same as K'), [L/T]
C_D	Coefficient of drag
D	Diameter (of vessel, unless subscripted), [L]
f_1	Area ratio for flow through horizontal vessel (Figure 9)
f_2	Ratio of required vertical travel for separation to vessel diameter for flow through horizontal vessel (Figure 10)
F	Force, [ML/T^2]
g	Gravitational acceleration, [L/T^2]
H	Liquid height in horizontal vessel, [L]
K'	Factor for determination of terminal velocity, [L/T]
L	Vessel length, [L]
m_d	Mass of droplet, [M]
Re_d	Droplet Reynolds number $\left(= \rho_v U D_d / \mu_v\right)$
S	Safety factor used on desired droplet terminal velocity for vertical design (<1)
t	Time, [T]
U	Velocity, [L/T]
v_d	Velocity of droplet, [L/T]
$\dot{V}$	Vapor volume flow rate, [L^3/T]
V_d	Volume of droplet, [L^3]
x	Horizontal position, [L]
y	Vertical position, [L]
Symbol	
ρ	Density, [M/L^3]
μ	Viscosity, [M/LT]

τ_R	Residence time, [T]

Subscripts

B	Buoyancy
D	Drag
d	Droplet
G	Gravity
L	Liquid
t	Terminal
v	Vapor

Superscripts

0	Initial

Cited References

ASHRAE, 1997, *Handbook of Fundamentals*, American Society of Heating, Refrigeration and Air Conditioning Engineers, Atlanta, GA.

ASHRAE, 1998, *Refrigeration Handbook*, American Society of Heating, Refrigeration and Air Conditioning Engineers, Atlanta, GA.

Bird, R.B., W.E. Stewart, E.N. Lightfoot, 1960, *Transport Phenomena*, John Wiley & Sons, New York, NY.

Gerhart, P.M., R. J. Gross, 1985, *Fundamentals of Fluid Mechanics*, Addison-Wesley Publishing Co., Reading, MA.

Gerunda, A., 1981, How to size liquid-vapor separators, *Chemical Engineering*, May, v. 88, n. 9, pp. 81-84.

Miller, D.K., 1971, Design and Application Guide for Gravity Gas and Liquid Separators, Suction Traps and Low Pressure Accumulator-Receivers Used in Refrigeration Systems, York Division, Borg-Warner Corporation Engineering Department.

Miller, D.K., 1971, Recent Methods for Sizing Liquid Overfeed Piping and Suction Accumulator-receivers, IIR.

Montross, C.F., 1953, Entrainment Separation, *Chemical Engineering*, October.

Souders, M. Jr., G.G. Brown, 1934, Design of Fractionating Columns: I. Entrainment and Capacity, *Industrial and Engineering Chemistry*, January.

Stoeker, W.F. 1998, *Industrial Refrigeration Handbook*, McGraw-Hill, New York, NY.

Svrcek, W.Y., W.D. Monnery, 1993, Design Two-Phase Separators Within the Right Limits, *Chemical Engineering Progress*, October.

Richards, W.V., 1985, A Critical Look at Old Habits in Ammonia Vessel Specifications, Proceedings International Institute of Ammonia Refrigeration, San Antonio, Texas.

Wu, F.H., 1984, Drum Separator Design - A New Approach, *Chemical Engineering*, April.